PD1233
Pen Display

Quick Start Guide
Guide de démarrage rapide
Guía rápida de inicio
快速入門手冊

1 Choose direction / Choisissez le sens / Elija la dirección / 改變腳架與筆座方向

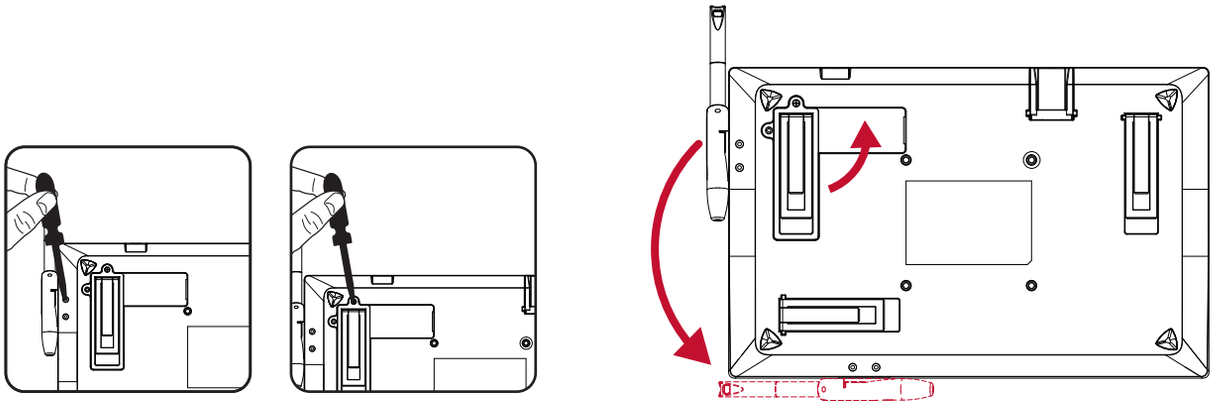

2

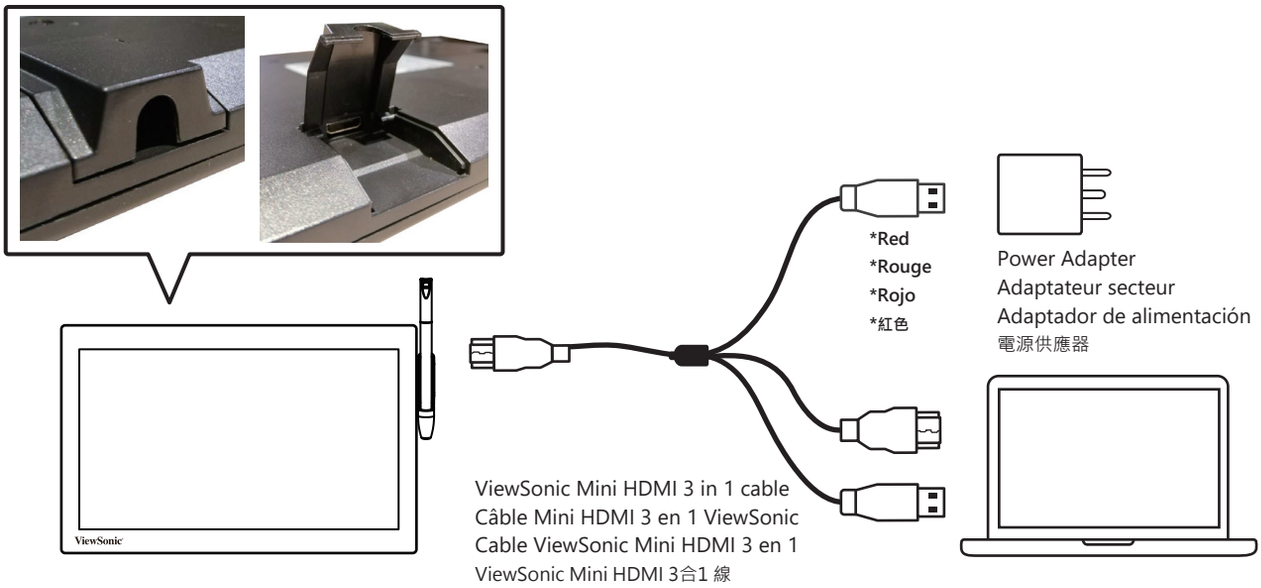

3 Download Driver / Télécharger le pilote / Descargar controlador / 驅動程式下載 :

https://www.viewsonic.com/global/products/pendisplay/PD1233#downloads

Install PenDisplayDriver
Installer PenDisplayDriver
Instalar PenDisplayDriver
安裝 PenDisplay 驅動程式

For ViewSign Console, please visit: https://manuals.viewsonic.com/Pen_Display_Software
Pour ViewSign Console, veuillez visiter: https://manuals.viewsonic.com/Pen_Display_Software
Para ViewSign Console, visite: https://manuals.viewsonic.com/Pen_Display_Software
有關 ViewSign Console, 請參閱 : https://manuals.viewsonic.com/Pen_Display_Software

4 Set as extended display / Définir comme affichage étendu / Establecer como pantalla extendida / 設定延伸桌面

5 Handwriting area mapping / Cartographie des zones d'écriture manuscrite / Asignación del área de escritura a mano / 選定觸控區域

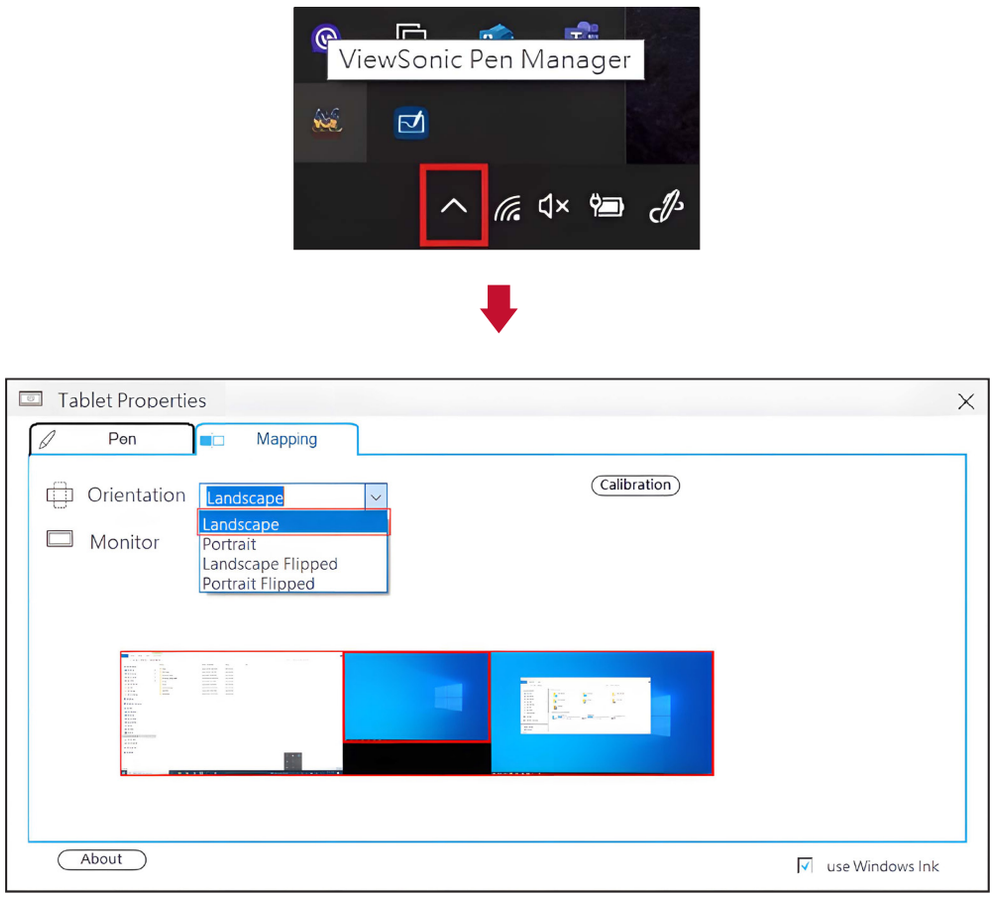

Copyright © 2024 ViewSonic Corporation. All rights reserved.