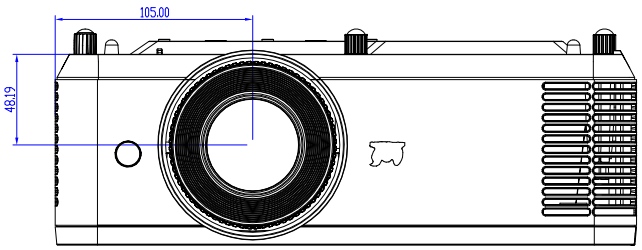

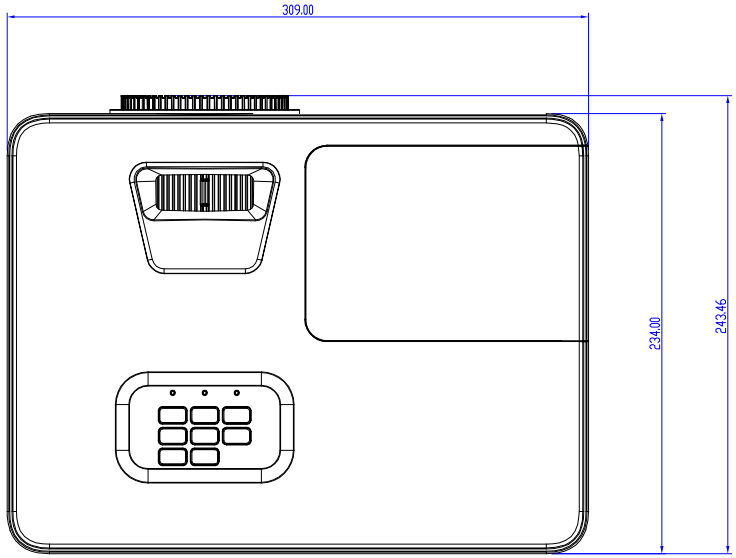

SCALE 1:2

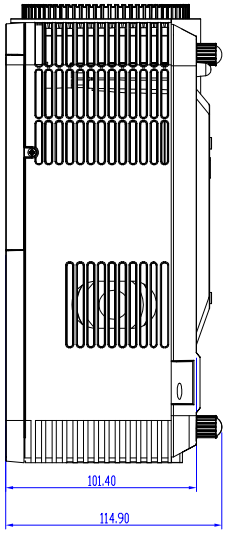

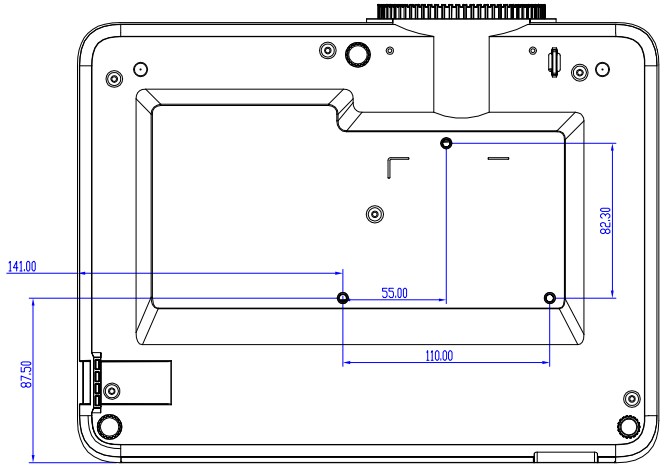

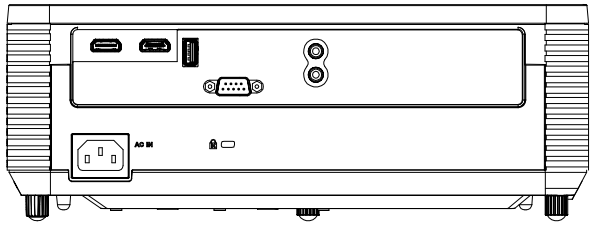

Rev.	Initiator	Date	Description	ECR NO.
				X

LIMITS UNLESS OTHERWISE NOTED

1-6	±0.1	300-1000	±0.8
6-30	±0.2	1000-2000	±1.2
30-100	±0.3	2000-	±2.0
100-300	±0.5	ANGLE	±0.5°

DRAWN		
ENG.		
CHK.		
APPD.		
TITLE		
SCALE	UNIT	MATERIAL
1:1	mm	

ViewSonic

NAME : PA700W

PART NO. | Rev.

FINISH | A3 | SHEET 1 OF 1