IFP5550-2 Silkscreen

Scale: 2:1

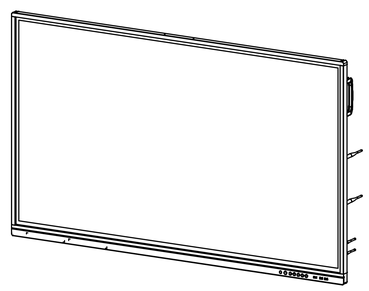

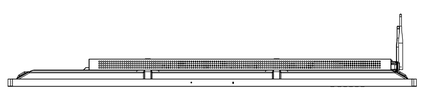

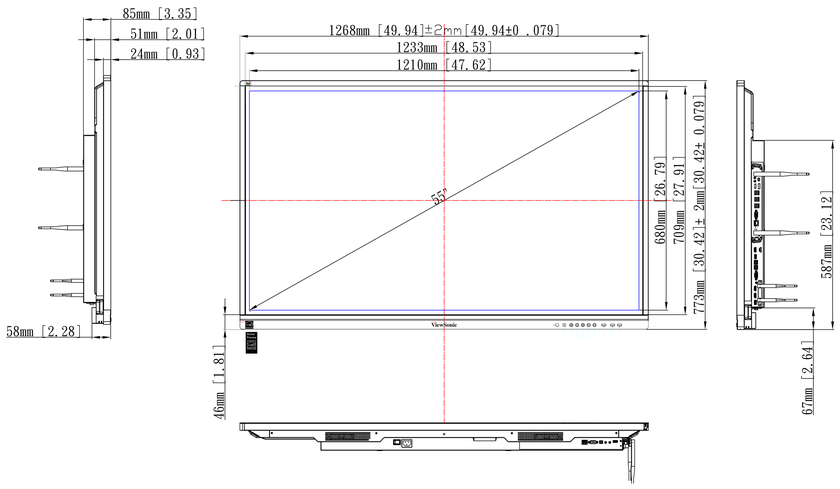

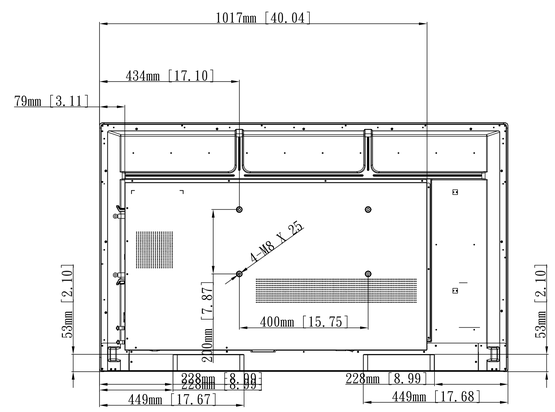

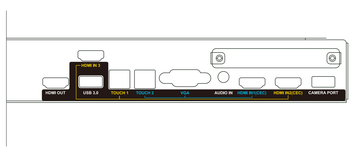

Pantone White Pantone 296C Pantone Yellow 012C

Side IO

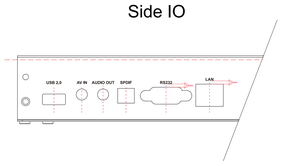

BOTTOM IO

ViewSonic

Model Name:
IFP5550-2

Product color:

Graphic: Scale: 1:1

Silkscreen Description:

ViewSonic

Size: 80x12.6 mm
Silver Plate No.: E015-080-W

Size: 99.7x6.2 mm
Color: Pantone 427C

Size: 53.7x1.8 mm
Color: Pantone 427C

Size: 26x27 mm
Pantone Black Pantone White

Size: 18.3x12.7 mm

UNIT: mm	Scale: 1:1	Date:01/10/2019	DCN #: VS-D180082